Draft 2 13/02/2020

EN

TR-EVO

220-240Vac
INSTRUCTIONS FOR USE

MG INDUSTRY srl Via Casa Celeste 14 36014 Santorso (VI) Italy E-mail mg@mgonline.it

General Index

Editor's notes

The manufacturer reserves the right to make changes or improvements without prior warning to this documentation and the devices they describe.

Utmost care was taken in the collection and verification of the documentation contained in this manual; however, the manufacturer cannot be held in any way liable for its use. The same applies for each person or company involved in the creation and production of this manual. Unless otherwise specified, every reference to the company, names, data and addresses used in the examples is purely casual and for the purpose of illustrating product use.

Draft 1 10/18/2017
Draft 2 13/02/2020 Various corrections and improvements. Adapted to firmware 1.2

Introduction

The TR-EVO temperature controller is a valid tool to adjust temperature in heating elements, without using external sensors.

By taking advantage of the voltage-current characteristic, the TR-EVO manages to maintain the temperature set even in conditions of high heath loss, thereby obtaining considerable benefits compared to traditional methods used.

To reach the temperature set in the least time possible (100 ÷ 350 ms) and keep it constant means obtaining an increase in operating speed, but also an extended operating life of the heating part, and enables less waiting times due to thermal inertia or dispersions of the various metal parts supporting the heating element.

The TR-EVO was designed to be controlled or control, from the simplest electro-mechanical packaging machines to the most complex packaging lines with PLC or PC.

All the operating parameters can be entered using the display or the integrated serial port RS485. Extremely easy to use, highly functional and compact, this system is the strength of heat sealing processes, including with hot air, temperature control, hot cutting, etc...

Warnings

ATTENTION: for correct use of your temperature controller, it is essential to comply with the instructions in this manual. You are advised to read each part of it carefully before start-up, to prevent possible damage due to improper actions.

Avoid installing the equipment in the immediate vicinity of high power units, relays, motors, etc.
The equipment is NOT equipped with an ON/OFF switch, therefore it switches on as soon as it is connected to the power supply.
The power supply should have adequate protection against any short circuits or anomalies on the equipment.
Install connections using cable types with adequate sections for the voltage and current limits specified in the manual.
Check the system has a good ground connection.
Do not use the equipment in environments with a dangerous atmosphere (inflammable or explosive).
TR-EVO operation implies use of specifics alloys for the heating elements. Use of different alloys can cause the TR-EVO to malfunction with possible temperature instability and/or dangerous overheating.

Technical characteristics

Device supply: 230 Vac (+15% / -15%) 4W max. used by controller. 115Vac option available
Power supply: 230Vac with maximum distorsion of 10%. 115Vac option available
Mains frequency: 47 Hz to 65 Hz whit automatic adaption to the mains frequency in this range
Peak output power: 3600 VA. Continuous output power 1200 VA. 1800VA with 115V supply
Load values: MAX 80Vac 100A. MIN 8Vac 12A
Device safety increased by the use of 2 breakers in series to power the load.
Command inputs: 24Vac/30Vdc +20 -60% opto-isolated.
Signaling output: max 30Vdc 50mA opto-isolated, free of voltage, NPN or PNP configurable.
Alarm output: max 30V 0,5A free voltage contact.
Temperature adjustment range: 30 to 500 degree with lockable limits.
Unit operational temperature: 0 to 50 degree
Adjustments and configuration through integrated keypad and numeric display, or through serial bus EIA/TIA485, or through external voltage/potentiometer.

Description of parts

Control unit

Technical data:

-Dimensions mm. 96x48x118
-Weight gr. 200
-Fitted assembly on panel.
-Vertical or horizontal insertion.
-Self-extinguishing PVC material UL94 V-O
-Protection level IP42
-Numerical digits LED display.
-Powered by power unit.
-Maximun sensing voltage 80Vac.
-Maximum sensing current 100A.

Power unit

Technical data:

-Dimensions mm. 106x90x69
-weight gr. 500
-Assembly on bar DIN EN 50022- 50035
-Self-extinguishing PVC material UL94 V-O
-Protection level IP20
-Peak output power 3600VA for t < 1sec.
-Maximum continuos power 1200 for t > 1 min.

Transformer

Technical data:

-Single-phase, pulse transformer with dual safety insulation according to standards ISO/EN 61558
-Variable dimensions from mm. 122x95x108
-Variable weight starting from 4.3Kg

DIN bar adapter

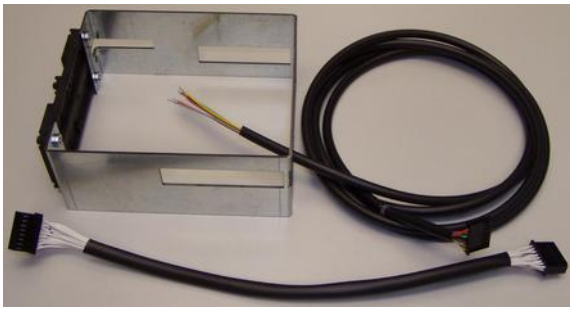

Technical data:
-Standard reference DIN EN5002250035
-Front dimensions 112x55mm.
-Total depth with mounted device 155mm.
-Metal an PVC made.

Operation

Principles

The temperature controller adjusts the temperature of a heating element without using probes, but by basing itself on the variation characteristics of the resistance, on temperature variation, which is characteristic of each heating element. Measuring the voltage and current sent to the heating element enables calculation of its resistance and by comparing it with that of the cold detected element during the "tuning" phase, the temperature can be found on measurement. Based on these calculations, the power necessary to bring or maintain the temperature set is calculated and a solid state switch is activated to provide the necessary power to the heating element. Thanks to the high speed with which this measurement is taken (50 times per seconds) very fast adjustment with good temperature stability of the heating element is possible. Heating times of 150ms. are normal for this equipment and no particular measures are required to reach them. At the same time, the temperature can be kept constant also in very low power request conditions, allowing heating to be kept continuously on.

Operating modes

The temperature controller can work autonomously using the integrated display and keypad, or can be connected to a PLC control device or PC using an EIA/TIA485 interface, or can be adjusted by external analogue voltage or by a panel potentiometer.

Installation

Assembly

Assembly and installation must only be carried out by qualified staff

Before you begin: *-Ensure correct power supply voltage.*
-Check an efficient ground system is present

Cable passage hole for heating element current detection.

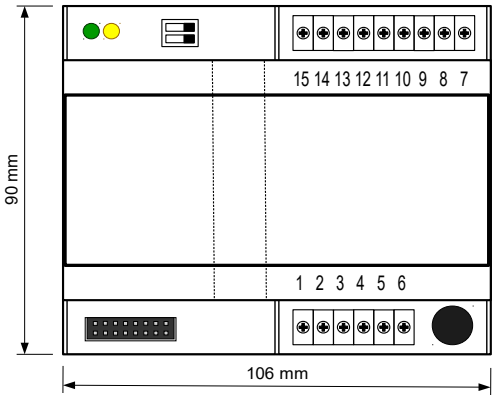

Power unit

Reserve in the electrical cabinet 110mm on a DIN rail EN 50022- 50035 and insert the unit in it.

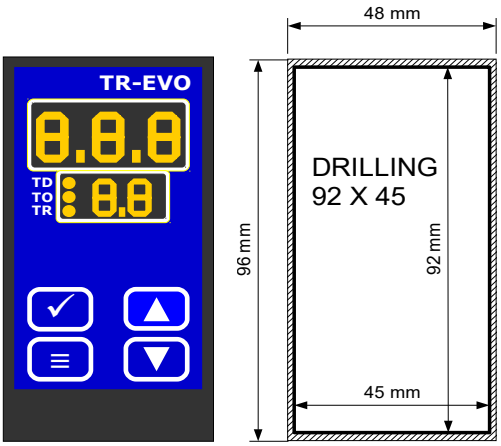

Display unit

Cut out the panel based on the measurements given, insert the module and tighten from behind using the screw fastening clips supplied.
An adapter for DIN rail installation EN 50022-50035 can be supplied on request, in this case reserve 60mm next to the power unit.

Power transformer

Positioning of the transformer is constraint-free, but you are advised to assess it based on the cable length. It is good practice to optimise the length of the cable, especially the part connected to the secondary.
If possible, avoid dividing the cable into sections using terminals.
The dimensions of the transformer are variable and depend on the application. See chapter for calculation.

DIN rail adapter

Reserve, next to the power unit, 60mm on a DIN rail EN50022- 50035
Connect the supplied cables to the display unit.
Insert the display unit into the slot and secure it with the standard panel mounting clips provided.
The cables are used for connection to the power unit and the RS485 communication module of the PLC.

Wire the system using the adequate wiring diagrams for your configuration. For example, a minimal diagram is provided below.

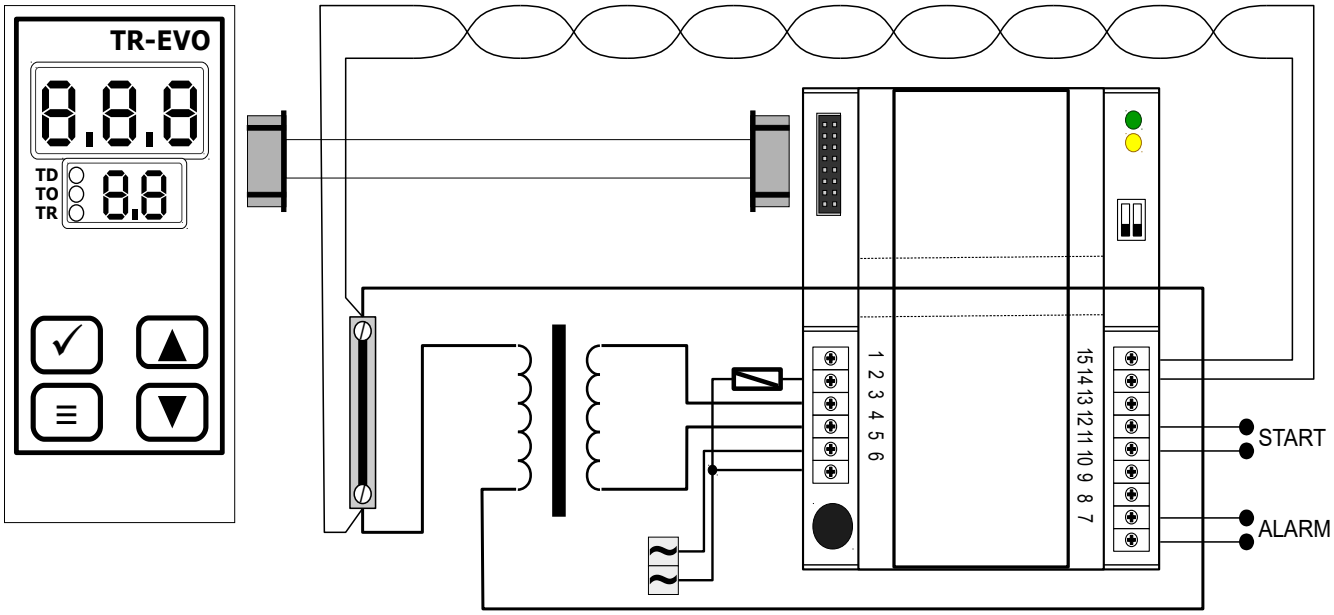

Always check connections are correctly tightened. The current on the circuit is very high and poor connections can cause problems.
Warning: remember that during heating, for example of a bar, elongation and shortening caused by heating and cooling of the heating element must not affect the quality of the contacts.

Description of the connections on the power unit

Terminal 1
Connection for device grounding.

Terminal 2
Mains phase input for heating element command, protected by an external fuse.
Neutral mains is at terminal 5 shared with device supply neutral.
Voltage must be between 220 and 240 Vac (+15% / -15%) with maximum distortion of 10% and frequency from 47 Hz to 65 Hz
On connection between the power supply line and the equipment, cables with a 2.5mm^2 section must be used.

A 16A fuse with semi-rapid response should be used as the protective component.

Terminals 3, 4
Output to pulse transformer primary.

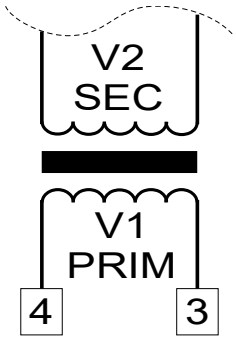

The transformer should be dimensioned starting with the size of the element to control, i.e. the type of alloy, width, thickness and length. (see specific section).
Unless legislative indications state otherwise, cables with a 2.5mm^2 section must be used on connection to the primary.
On the connection between the transformer secondary and the heating element, the cross-section should be chosen according to the currents and connection lengths involved, a cable with section between 4mm^2 and 8mm^2 is recommended.

Terminals 5, 6
Device power supply input.

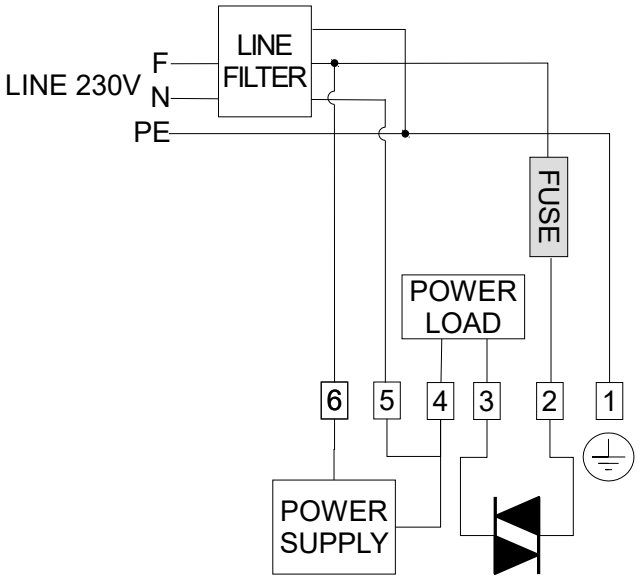

Here, connect the power supply of the device between 220 and 240 Vac (+15% / -15%). This line is protected inside the device with a 100mA fuse.
Connect mains neutral to terminal 5 shared with the neutral of power output.
Connect mains phase to terminal 6 to supply device. This connection allows to signal on the display the possible intervention of the protection circuit.
The mechanical dimensions and the type of filter to install are based on the plate data of the pulse transformer. Contact our technical office for the relevant dimensioning.

Terminals 7, 8
"ALARM" output
Free contact to signal any faults: this contact is closed in the event of monitored malfunctions, for example, breakage of the heating element, short circuit, etc. Apply a maximum voltage in alternating current of 100V/0,5A and continuous current 24V/0,5A.

Terminals 9, 10
"IN WORK" output

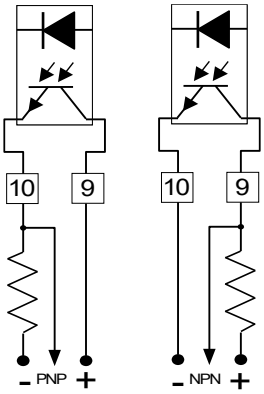

Opto-isolated output of sealing circuit signaling: this optical coupler is closed during the sealing cycle, and return open at the end of the cycle; see the "operating modes" section for further operating details.
It can be externally configured NPN or PNP, with a maximum current which must not exceed 50mA at 24 Volts continuously.
Pay attention on connection to polarity: terminal 9 has the positive (collector) and terminal 10 has the negative (emitter).

Terminals 11, 12, 13
Heating and/or pre-heating start inputs

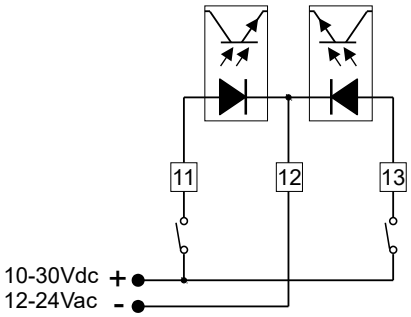

Wire to these inputs the signals for sealing cycle control: these signals must have a voltage between 12 Vac and 24Vac or from 12Vdc to 30Vdc by applying the positive to terminal 11 and 13 and the negative to terminal 12.
In the presence of the START signal(terminal 11), the heating element reaches the working temperature.
In the presence of the pre-heating signal(terminal 13), the temperature is adjusted to pre-heating level.
Further details are found in the "operating modes" section.

Terminals 14, 15
Heating element voltage measurement input.
Use is preferred of the flexible, twisted cable (with strand conductors) with a 2x0.5 mm² section with at least 15 twists per meter.

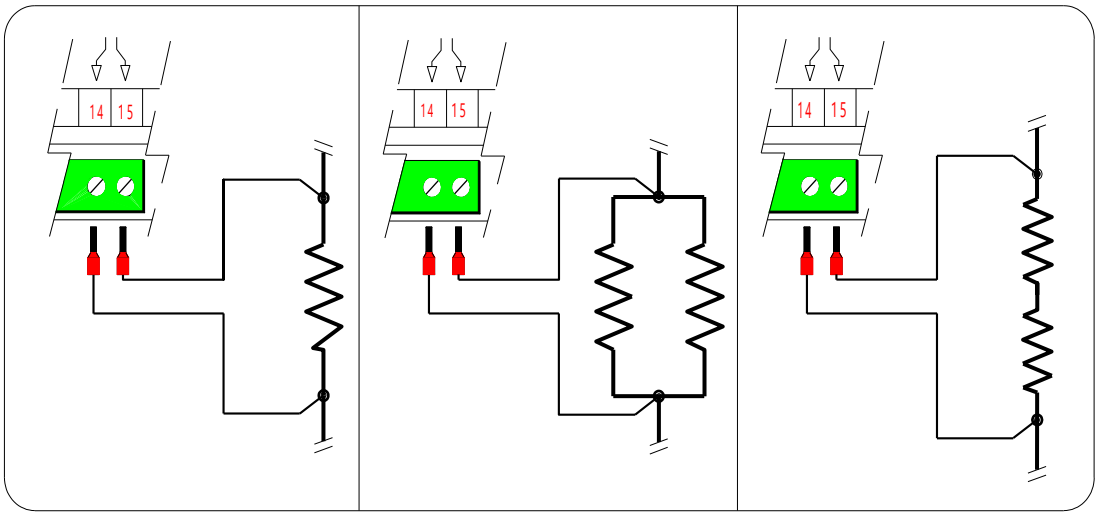

If there are multiple heating elements connected in series or parallel, the voltage is taken from the ends of the heating elements based on the diagram outlined above.

Caution: To obtain correct measurements, this cable must be connected to the ends of the heating element, connecting at other points introduces measurement errors and reduces the efficiency of temperature control.

Current measurement input

To sense the heating element current, TR-EVO has a dedicated passage where to pass one of the connecting cables between transformer and heating element. Normally the cable only makes one passage through the hole. In particular cases and depending on the characteristics of the heating element and/or the transformer, the number of passages to be made could be more than one. See in the figure on the side of this paragraph how to make two passages. Do reference to the section "Transformer sizing" for more information.

User interface connector

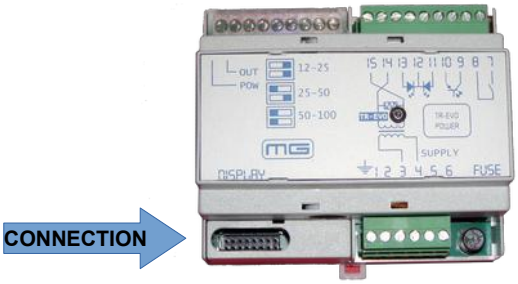

The power unit should be connected to the display/user interface unit using the cable supplied. 1-3-5 meters cable lengths are available as option and must be specified when ordering.
Under the semi-transparent cover are available switches for the selection of the work current and two signalling LEDs are visible.

Signalling on power module

Green LED L1: Power supply signal. It stays on as long as the power supply is on.
Yellow LED L2: Power signal. It switches on when the temperature controller commands the pulse transformer.

Configuration of the switches for selection of the current ranges

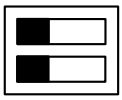

Both open, 12-25A range

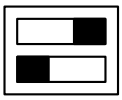

DIP 1 closed , DIP 2open, 25-50A range

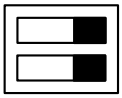

Both closed, (ON) 50-100A range

Connections on the display unit

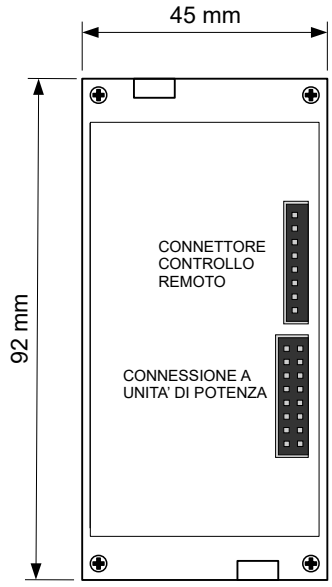

CONNECTOR FOR REMOTE CONTROL

PIN	DESCRIPTION
1	NU
2	Potentiometer + output
3	Control voltage input (0-10V) or potentiometer
4	Control voltage 0V reference or potentiometer
5	NU
6	Serial data terminal A EIA/TIA-485 D0-
7	Serial interface 0V reference
8	Serial data terminal B EiA/TIA-485 D1+

The "power unit" connector is reserved for the connection cable with the relevant unit.

Selection of heating element

Alloys

The heating element alloys currently supported by the temperature controller are:

Type	Name
0	Nickrome40®
1	Alloy20®
2	Steel AISI316
3	MS500 (it is not an alloy, but is used to adapt the air heater to the temperature controller)

Nickrome40 and Alloy20 are registered trademarks of the relevant manufacturer.

Transformer dimensioning

Considering the voltage of the primary should be the same as the power supply voltage of the temperature controller and then 230Vac or 115Vac, another two parameters must be defined: voltage to the secondary and transformer power. To calculate these parameters, start with the quantity of energy necessary for the operation, however for simplicity purposes it is considered that to heat a bar to approx. 200°C in approx. 200mS a specific power of 30W per cm^2 is needed on the outer surface of the heating element.

The formula:

$$Pr = Cs \times Lu \times (La + Sp) \times 2$$

enables calculation of the maximum power **Pr** required by the heating element, where:

Cs = surface load in Watts per cm2. This value determines the speed the bar heats and assumes, as seen above, a reference value of 30. Naturally, this value can be changed if higher speed is required, or less power supply is available, or power that exceeds the maximum that can be supplied by the controller.

Lu = heating element length in centimeters.
La = heating element width in centimeters.
Sp = heating element thickness in centimeters.

And its resistance R in ohm is:

$$\Re = Rs \times Lu / 100$$

where:
Rs = Specific resistance of the band in ohm/meter

These values are used to calculate the secondary voltage **Vs** of the transformer in volts according to the formula:

$$Vs = \sqrt{Pr \times \Re}$$

The power of the transformer **Pt** must be calculated in Watts using the formula:

$$Pt = Pr \times 1{,}1$$

where 1.1 is a constant to compensate transformer losses.
In addition, we can calculate the peak current I in Amperes requested by the load which is worth:

$$I = \frac{Pr}{Vs}$$

"Hardware" configuration

Based on the current calculated, the switches must be configured on the temperature controller and in particular: if the current is over 50A both switches should be closed, if the current is between 25 and 50A switch 1 should be closed, if the current is between 11 and 25A the switches should be left open.

For more detailed information, please compile and send the questionnaire in the appendix. We will reply with a personalised application note for your application.

Start-up

On first start-up, the equipment will probably give an error signal. This signal is normal and depends on the fact the parameters of the heating element have not been registered yet. For the temperature controller to acquire these parameters, the Tuning procedure must be activated <u>which should always be executed after replacing the heating element</u>.

The **tuning** procedure enables the temperature controller to acquire the cold resistance value of the heating element and starts with the specific sequence indicated in the programming chapter or from remote via interface 485. At the end of the procedure, the temperature controller will start working properly again or blocks, displaying an error that indicates the reason the procedure did not conclude properly.

Always execute the tuning procedure with the heating element at room temperature.

On switch on, the temperature controller prepares for operation by synchronising with the mains frequency and displaying it on the numerical display, (F 50 for 50Hz) .

Once synchronised, the temperature controller goes to "standby" mode and displays the temperature read on the heating element. To read the temperature, the power output is briefly activated at a fixed rate, allowing the device to continuously control the load status and promptly signal any anomalies. If the device detects anomalies in its operation, it blocks and signals the type of anomaly on the display and activates a signal output.

In standby mode, the equipment does not adjust the temperature and displays the temperature read on the heating element. Heating starts if the pre-heating and/or START input are activated. These commands can also be serially activated, however the response time is not guaranteed therefore you are not advised to use them in situations where the response time is important.

The operating status of the temperature controller is indicated on the leds on the left of the second row of the display. The first led on top indicates heating has started by applying voltage to the START input, however the temperature has not yet reached the value set or start of heating cicle delay timer(td) is still active. When the temperature reaches the working value, the central led switches on as long as the START input is active or until the pulse timer(to) expires. Lastly, the bottom led switches on when heating has concluded, however the heating element has not yet cooled down or cooling timer has not yet expired.

The working temperature can be set using external voltage controlled by a potentiometer or an analogue output, using the serial interface, or directly from the keypad on the display. To set the working temperature, press the ≡ key to display the temperature, indicated by the abbreviation ht on the lower display, and press the ▲ and ▼ keys to edit the value.

Pressing the key again cFG is displayed on greater display line and 00 on lower display and access the equipment configuration is enabled (for information on the configuration, refer to the relevant chapter).

Press the key again to display the temperature read on the heating element again.

For test purposes, you can press the key to force activation of the heating cycle.

Operating modes

The temperature controller can be configured with various operating modes.

In brief, the available modes are:

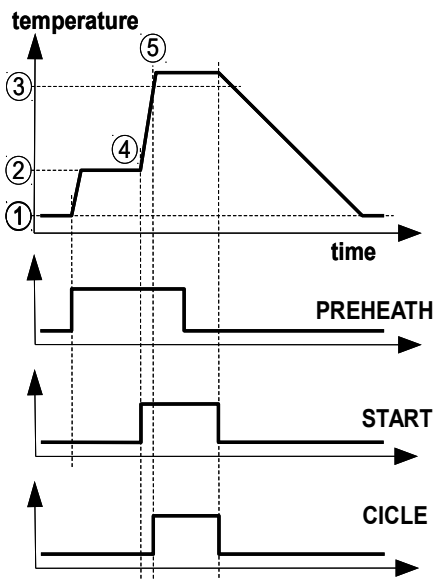

interactive:

by doing so, the pre-heating input allows you to activate temperature control at the pre-heating temperature (2) and the start input allows you to activate the temperature control at the heating temperature (4). The start input has priority over the pre-heating input.

On reaching the working temperature (3), the active cycle output activates.

On deactivating the heating input temperature goes low and active cycle output deactivates.

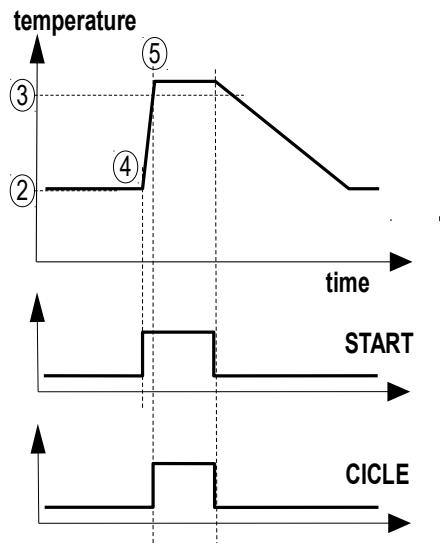

Always on:

in this mode, temperature control is always on and continuously adjusts the pre-heating temperature. Activating the start input, the adjusted temperature changes to the heating temperature.

On deactivating the heating input temperature goes low and active cycle output deactivates.

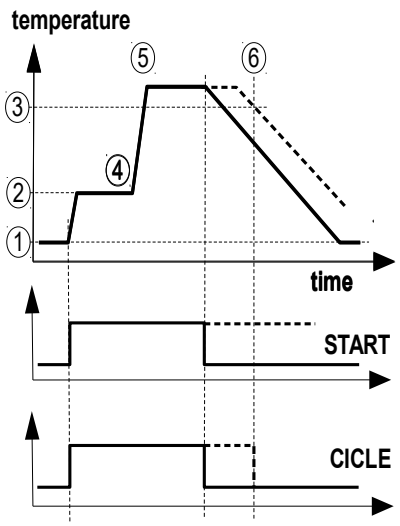

Timed:

in this mode, when the pre-heating input is on, it activates temperature adjustment to the pre-heating temperature. Start input activates the timed heating cycle which is composed of 2 phases. The first phase (indicated with the TD led on the display) delays heating starting for the time set on the relevant timer. The second phase (indicated with the TO led on the display) adjusts the heating temperature for the time set on the relevant timer. At the end of the cycle, the equipment waits for start input disabling to re-start a new cycle. The cycle can be stopped at any time by disabling the START signal.

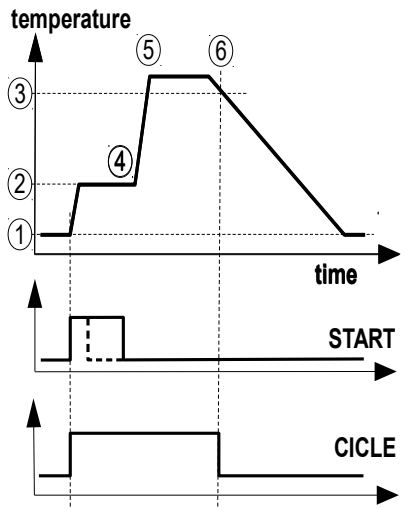

Pulse:

in this mode, the start input is used to start the timed cycle which will only end on conclusion of the 3 phases composing it

The phases are: (4) delay, adjustment activates at the pre-heating temperature, however heating is delayed for the time set on the relevant timer. This time is used when it is not possible to have the START signal activated at the right moment. (5) Heating, the temperature is brought to the work value for the time selected on the relevant timer. (6) Cooling, the heating element is no longer powered and when the temperature is below the value set on the relevant parameter or on expiry of the relevant timer, the cycle concludes by disabling the cycle output.

System and alarm monitoring

When on, the temperature controller continuously controls operations are proceeding correctly and if errors are found that prevent proper operation, blocks and signals the cause of the error. Signalling is implemented via contact of a relay that signals the tool condition to the operating machine, using an error number displayed on the numerical display, and transmitted instead of the temperature on the serial interface.

Errors table and possible solutions

Error code	Description
1	Load power supply frequency outside limits; this error highlights the protective fuse has blown or the power supply frequency is outside the values permitted. Restore the fuse or check the power supply line.

2	Rapid temperature change This error occurs in the tuning procedure and highlights the operation started with the heating element hot. Wait for it to cool and repeat the operation.
3	Insufficient voltage reading; this error occurs in the tuning procedure and highlights an error in transformer connection or in its dimensioning. During the first tuning operation after installation, it may also indicate improper connections.
4	Insufficient current reading; this error highlights breakage of a heating element when using elements in parallel, if it occurs during the tuning procedure it highlights a dimensioning error of the pulse transformer or in jumper configuration on the temperature controller. During the first tuning operation after installation, it may also indicate improper connections.
5	Too high voltage reading; this error highlights voltage is too high in the equipment feedback and requires a tuning procedure. During the tuning procedure, an error highlights in the transformer connection. During the first tuning operation after installation, it may also indicate improper connections.
6	Too high current reading; this error highlights the short circuit of one of the heating elements when using elements in series, if it occurs during the tuning procedure it highlights a dimensioning error of the pulse transformer or in jumper configuration on the temperature controller. During the first tuning operation after installation, it may also indicate improper connections.
7	Voltage not reaching the heating element Possible causes: - Power adjustment element (TRIAC) faulty. - Connections between the temperature controller and the heating element interrupted. - pulse transformer faulty.
8	Current not passing through the heating element Possible causes: - heating element damaged. - loose heating element fastening.
9	Voltage reaching the heating element not read. Possible causes: - the feedback cable to the temperature controller is interrupted. - loose connections on the temperature controller terminals. - distortion on the power supply line too high.

10	Short circuit: - on the secondary circuit of the pulse transformer. - on the heating element. - on the twisted cable.
11	Heating activated in error; this error indicates a likely fault in the power adjustment element. It can activate in the event of high inductive pulses on the power supply.
14	Memory not valid on the temperature controller; load a basic configuration on the temperature controller and proceed with a new configuration.
15	Memory not valid on the temperature controller; repair the temperature controller.
16	Internal fault; repair the temperature controller.

Configuration

Configuration of the parameters can be executed via:

- Remote mode RS485: the configurations can be executed through commands sent via interface EIA/TIA485.
- Internal mode via the numerical display: the configurations are executed directly using the associated keys.

With serial bus connection

In this mode, configuration is executed using the commands sent via the EIA/TIA485 interface by a PLC or PC remote device. The communication protocol manual is separate and available on request.

With numerical display

Once the equipment starts, it works in operating mode displaying the temperature read on the heating element.

Press the ≡ key twice to display cFG. The lower display shows 00. Press the ✓ key on the keypad to display the first basic parameter or ≡ again if you want to return to the temperature display.

Basic parameters

The value is displayed that is currently set of the pre-heating temperature on the top display and Ph on the bottom display. If you do not want to edit the value, press the ≡ key to go to the next parameter or press the ▲ and ▼ keys to edit the value between the minimum of 50° and the maximum which is set in configuration 13. The ✓ key activates the value or saves it in the temperature controller memory.

On releasing the key, a new value is displayed which, **if timed operation was enabled**, indicates the delay timer setting between the start of the cycle and the actual start of the heating phase and is indicated on the lower display with td. If you do not want to edit the value, press the ≡ key to go to the next parameter, otherwise the ▲ and ▼ keys edit the value and the ✓ key saves the timer in the temperature controller memory.

Identical configuration procedures are used for the subsequent to and tr parameters that respectively set the time in which the heating element stays at the heating temperature selected and the time to allow cooling of the heating element before indicating the operating cycle has concluded.

The next configuration sets the temperature differential compared to the heating temperature which defines when the heating element can be considered arrived to the working temperature and is indicated on the bottom display with dr. If you do not want to edit the value, press the ≡ key to go to the next parameter, otherwise the ▲ and ▼ keys edit the value and the ✓ key saves the timer in the temperature controller memory.

The top display shows tun and the bottom display shows 10 to indicate the procedure for parameter acquisition of the heating element. The ≡ key is used to return to temperature display. To start the procedure, press and keep pressed the ✓ key until the counter on the second line reaches zero.

Warning: The counter may continue to restart even if you press and hold the button signalling that the conditions are not right to start the procedure. Probably the heating element is not yet at room temperature, temperature required for success of the "tuning" phase, or the device is active in heating mode. Release the button, disable heating, and wait a few minutes before trying again.

At this point, the first top led switches on to indicate the procedure, divided in 3 parts, has started. After approx. 1-2 minutes, the procedure will end displaying, if everything was successfully completed, the three flashing leds and two numbers on the display. The ≡ key allows you to return to normal operation with temperature display. (for further information on the procedure, refer to the relevant section of the manual)

Extended parameters

The TR-evo operation is configured by adjusting another set of parameters, called extended parameters which can be accessed with the following procedure:

To access the extended configuration parameters, bring the bottom display to value 10 using the key ▲ when the top display shows CFG and then press ✓ .

The display then shows the first extended parameter indicated by the parameter code on the bottom display. If you do not want to edit the value, press the ≡ key to go to the next parameter, otherwise the ▲ and ▼ keys edit the value and the ✓ key saves the parameter in the temperature controller non-volatile memory.

The configuration parameters available are in sequence:

code 11 Max settable temperature for pre-heating. Configure the adjustment limit of the hP parameter. The absolute maximum that can be set is 100°.

code 12 Max settable temperature for heating. Configure the adjustment limit of the parameter ht. When the adjustment with potentiometer is used, this will adjust between a minimum set with the parameter ht and this maximum value. The absolute maximum settable is 500°.

code 13 Operating mode. See operating modes section of the manual

0 = adjustment only activates when inputs activate at the relevant temperatures set
1 = adjustment activates at the input pre-heating temperature for heating.
2 = timed heating cycle aborts if input removed.
3 = timed heating cycle after impulse on heating input.

code 14 Timers unit of measurement selection. It allows to operate with times up to 99.9 sec.

cEn (timing in hundredths of a second)
dEc (timing in tenths of a second)

code 15 Select temperature unit of measurement.

c (degrees Centigrade)
F (degrees Fahrenheit)

code 16 Analogue input voltage selection. Allows you to adjust the temperature with a potentiometer connected to the device or with an external 0-10V voltage connected instead of the potentiometer.

Pot input 0-5V with potentiometer
u01 input 0-10V

code 17 Alloy used in heater. Indicates to the TR-evo which material the heating element is made of, to allow the correct temperature indication.

1 = Nichrome40
2 = AISI 316
3 = Alloy20
4 = MS500
5-9 = Others

code 18 Increment at minimum firing TRIAC This parameter allows you to change how the heating element is powered to improve performance in certain specific cases. The parameter can take values between 0 and 20. Normally it should be left at 0.

code 19 Loop gain setting. It allows to adapt the temperature control according to the specific power used in particular situations. The parameter can assume values between 0 (very low gain, when specific power is very high) and 30 (high gain to try to compensate very low specific power). The default value is 5 valid for most configurations.

code 20 Serial bus mode. Select communication format depending on the other connected devices.

72 = (7 + 2stop)

73 = (7 + EVEN)
74 = (7 + ODD)
81 = (8 + NONE)
82 = (8 + 2stop)
83 = (8 + EVEN)
84 = (8 + ODD)

code 21 Serial bus speed. As the previous parameter adapts communication to others connected devices.

19 = 19200b/s
24 = 2400b/s
48 = 4800b/s
96 = 9600b/s

code 22 Device bus addres. Selects the number of peripheral devices that the TR-evo assumes in the communications bus, its function is to allow multiple devices to connect to the same communications port without interfering with each other. Device address 58 is reserved and must not be used on the bus that contains TR-evo devices.

On code 23, the display shows rEt and allows you to exit parameter programming status by pressing the ✓ key.

The ≡ key returns you to the beginning parameter 11 display.

Maintenance

ATTENTION: before carrying out any maintenance operation, ensure you have disconnected power.

The temperature controller does not require particular maintenance, however you are advised to every now and then check all the connections are tight, especially those going from the transformer to the heating element that carry very high current peaks.
The front of the keypad and the numerical display should be cleaned with a clean, wet cloth and neutral detergent. The dirt on all the other parts should be removed with compressed air.

Warranty

M.G. industry srl guarantees its product, identified via a manufacturing code or by a brand name, is free of material and manufacturing defects which would mean it does not conform to the technical specifications indicated, and is committed for 12 months, starting from delivery date, to repairing or replacing the faulty part, component, equipment or part of it free of charge, returned to the manufacturer, unless the fault or malfunction is due to:

a) poor installation, even if conducted by qualified staff;

b) improper use of the product, due to lack of expertise, negligence or non-compliance with the operating instructions;

c) lack of or poor maintenance, even if carried out by qualified staff;

d) repairs or changes made by the purchaser on his own initiative;

e) irregular voltage conveyance of the power lines, insufficient capacity and/or abnormal electrical installations;

f) abrasive or corrosive action of the physical or chemical agents;

g) poor or non-operation of the software or hardware or loss of data, registered by the purchaser, following storms, lightening, high temperatures or variation of electrical voltage, earthquakes, fires, etc.

The warranty also excludes all parts subject to normal wear, for which replacement is planned as ordinary maintenance.

In all cases in which the warranty remains excluded, as above given for example purposes, no compensation is due from M.G. srl for any damage caused to the purchaser and/or third parties due to use or poor operation of the product or for the period during which the system should remain inactive, as a result of faults and/or repairs, even if within the terms of warranty.

No indemnity will however be recognized for the purchaser or third parties for consequences deriving from no or improper functioning of the software and/or hardware, herein including direct and indirect damage.

For repairs or replacement, this part, component, equipment or part of it, must be sent/delivered to the manufacturer's plant on receipt of written authorization from M.G. industry srl and will not involve renewal of the period of warrant for the entire device, but only the relevant part.

The manufacturer reserves the right to make changes, at any time, to the equipment built and/or sold without being in any way obliged to make the same changes to the equipment previously built and/or sold.

Appendix

System dimensioning

To help you choose the components of your system, please compile the following module and send it to us. Based on the data provided by you, we can prepare an application diagram.

Company:

Manager:

Telephone

Fax

E-mail

Power supply voltage Vac frequency Hz

Maximum power available Watt

Material to seal:

Name:

Thickness: µm.

Layers:

❑ 2 layers ❑ 2 layers ❑ 3 layers ❑ 4 layers

Frequency/Speed max n. strikes /min. Sealing speed m./sec

Sealing time sec.

Choice of heating element

sealing type

❑ Sealing with hot air with heater MS500

❑ Impulse sealing with bar

Widtth: mm. Thinckness: mm. Lenght: mm.

Alloy: ❑ Supplier M.G.

❑ Other supplier

Supplier's name _____

Resistance per metre Ω/m.

Temperature coefficient ppm.

Heating element connection

Number of seals to simultaneously execute ▒ with connection:

❑ single 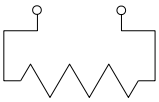

❑ parallel 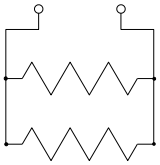

❑ series 

❑ other type of connection (attach application diagram)

Cooling ❑ no ❑ air ❑ water

Timed management of sealing ❑ no ❑ on machine ❑ on temperature controller

Desired user interface
❑ numerical display and potentiometer
❑ dnumerical disply and analog command
❑ display on machine operator panel
❑ display on machine operator panel with connection of multiple temperature controllers

Notes: